Maurice

1299_102254

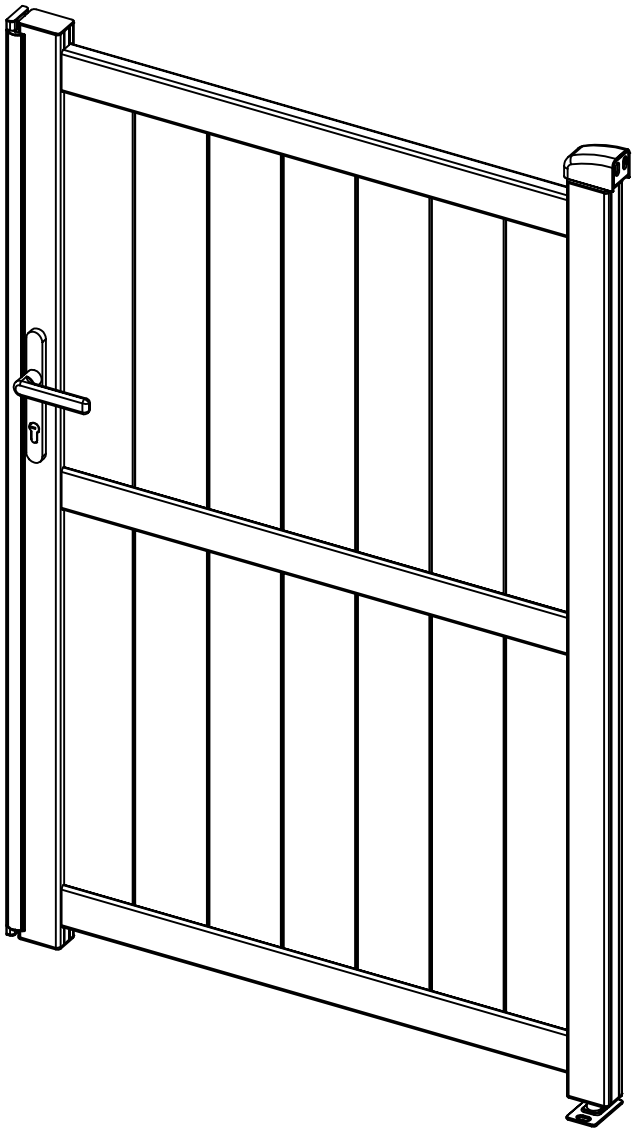

Habitat et Jardin

2025-2026

1299_102254

Dr-A1a		1553mm	x1	1/1		Dr-22			x1	1/1
Dr-A2a		1553mm	x1	1/1		Dr-23			x1	1/1
Dr-C3		971mm	x2	1/1		Dr-24			x4	1/1
Dr-C8a (+Do-A15)		971mm	x1	1/1		Dr-28			x4	1/1
						Dr-29			x2	1/1
Dr-C4		669mm	x14	1/1		Dr-25		M5x45	x1	1/1
Dr-A5		1553mm	x1	1/1		Dr-25a		M5x60	x2	1/1
Dr-A5a		376mm	x1	1/1		Dr-26		ST4x12	x3	1/1
Dr-A5b		937mm	x1	1/1		Dr-27		ST4.2x25	x2	1/1
Dr-A5c		20mm	x2	1/1		Dr-L30		ST4x10	x4	1/1
Dr-A6		30mm	x4	1/1		Dr-L31		ST4.2x13	x4	1/1
Dr-A7		1513mm	x1	1/1		Dr-L32		M8x60	x6	1/1
Dr-A9		1553mm	x1	1/1		Dr-L33		ST5.5x38	x12	1/1
Dr-8			x1	1/1		Dr-L34		M6x50	x3	1/1
Dr-9			x1	1/1						
Dr-10			x2	1/1						
Dr-11			x1	1/1						
Dr-12			x1	1/1						
Dr-13			x1	1/1						
Dr-14			x1	1/1						
Dr-15			x1	1/1						
Dr-17			x1	1/1						
Dr-30			x2	1/1						
Dr-31		M8	x2	1/1						
Dr-18			x1	1/1						
Dr-19			x1	1/1						
Dr-20			x1	1/1						
Dr-21			x1	1/1						

FR : SAV/INFORMATION /VIDEO/CONTACT
EN: AFTER-SALES SERVICE/INFORMATION/VIDEO/CONTACT
DE : REPARATUR-SERVICE UND ERSATZTEILE /INFORMATIONEN /VIDEO/KONTAKT
ES: SERVICIO POST-VENTA/INFORMACIÓN/VIDEO/CONTACTO
IT: SERVIZIO ASSISTENZA/INFORMAZIONI/VIDEO/CONTATTO
PT: SERVIÇO PÓS-VENDA/INFORMAÇÕES/VIDEO/CONTATO
PL: SERWIS TECHNICZNY/INFORMACJE/WIDEO/KONTAKT
NE: AFTER SALES SERVICE/INFORMATIE/VIDEO/CONTACT
HE: עם לתקשר/הווידאו/ מידע/ומכירות שירות לאחר

SAV.HABITATETJARDIN.COM

2025-2026

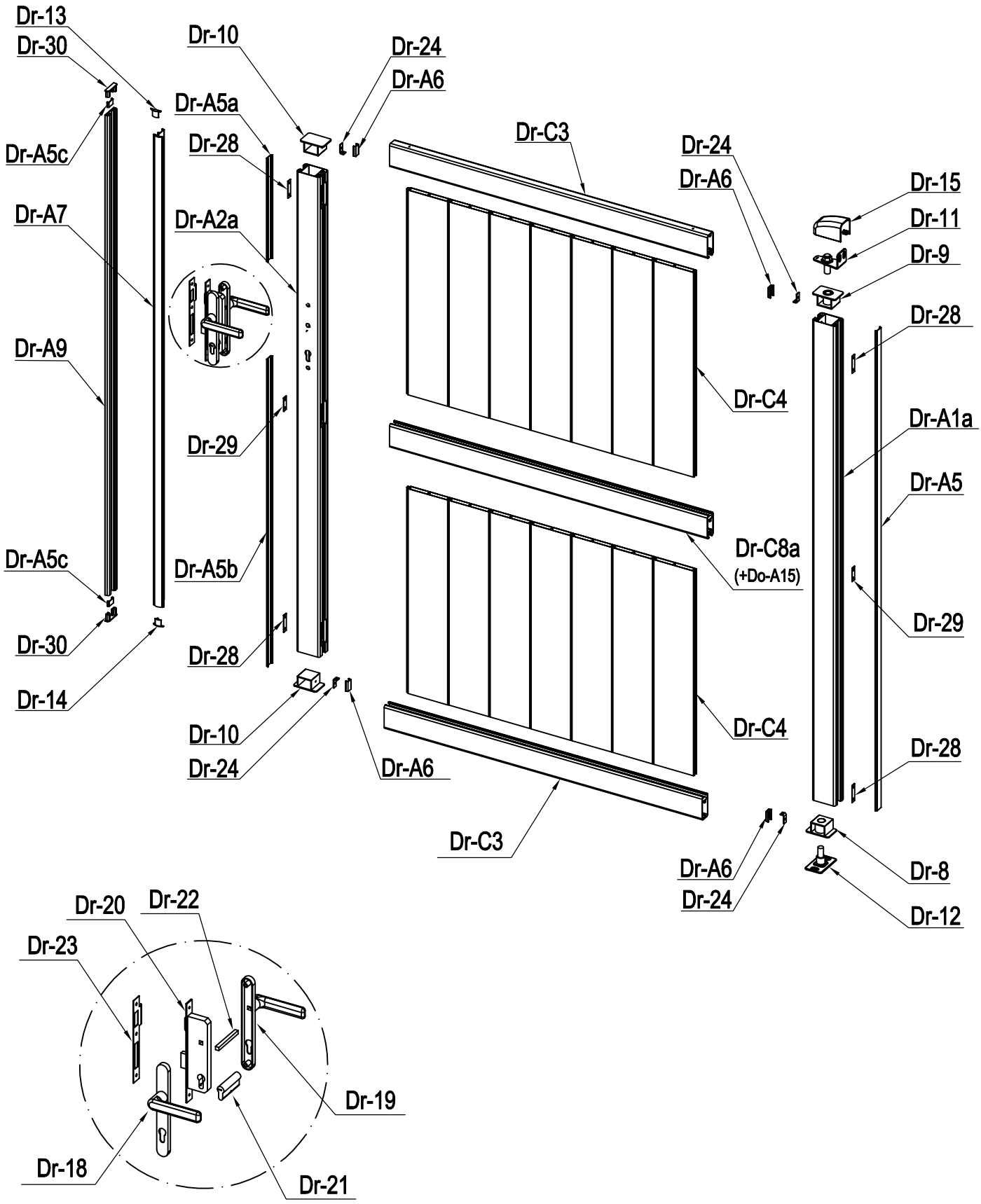
Dr-13
Dr-30
Dr-10
Dr-24
Dr-A6
Dr-A5a
Dr-28
Dr-C3
Dr-24
Dr-A6
Dr-15
Dr-11
Dr-9
Dr-A5c
Dr-A7
Dr-A2a
Dr-28
Dr-A9
Dr-C4
Dr-A1a
Dr-29
Dr-A5
Dr-C8a
(+Do-A15)
Dr-A5c
Dr-A5b
Dr-29
Dr-30
Dr-28
Dr-14
Dr-10
Dr-24
Dr-A6
Dr-C4
Dr-28
Dr-C3
Dr-A6
Dr-24
Dr-8
Dr-12
Dr-20
Dr-22
Dr-23
Dr-19
Dr-18
Dr-21

2025-2026

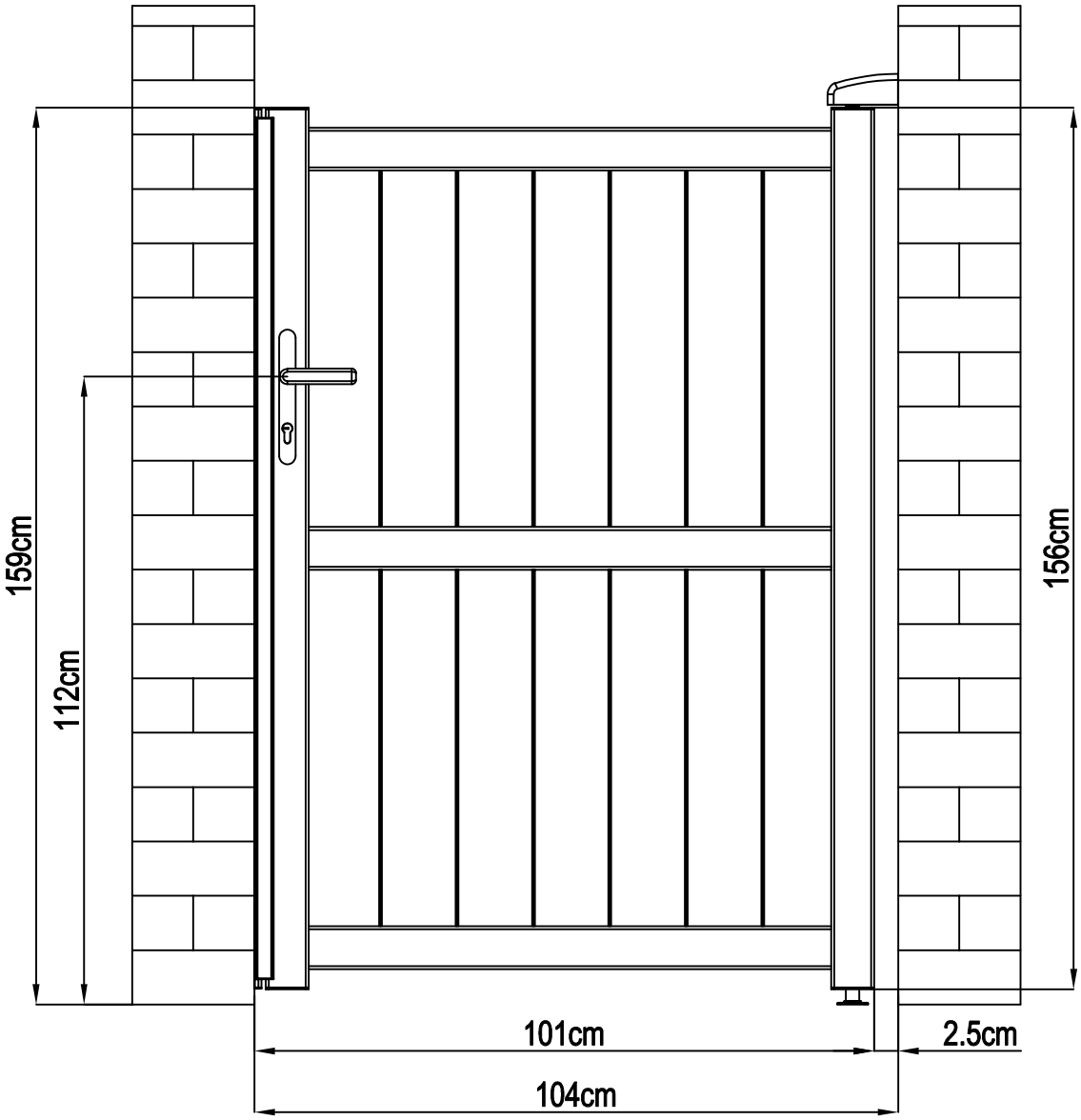

2025-2026

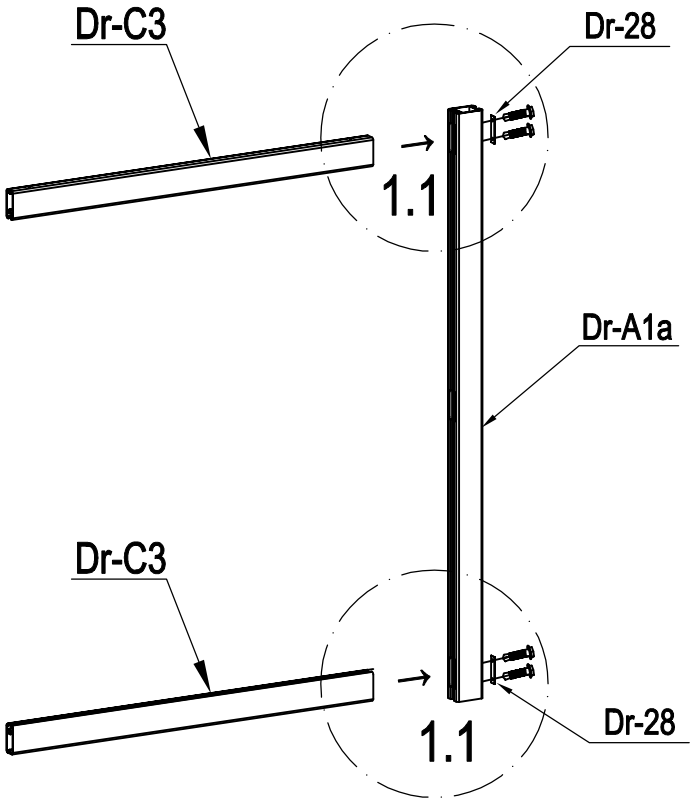

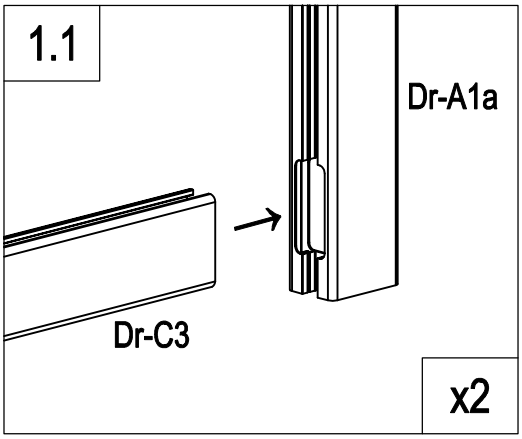

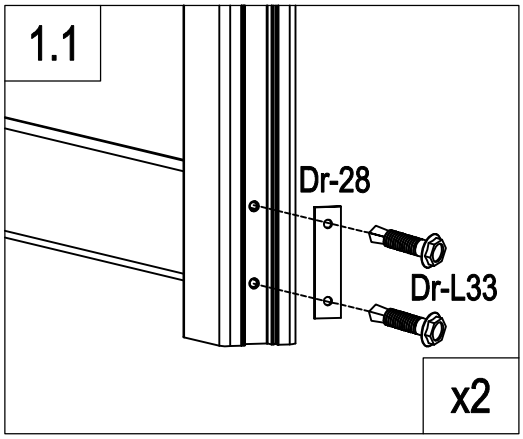

	Dr-A1a	1
	Dr-C3	2
	Dr-28	2
	Dr-L33	4

2025-2026

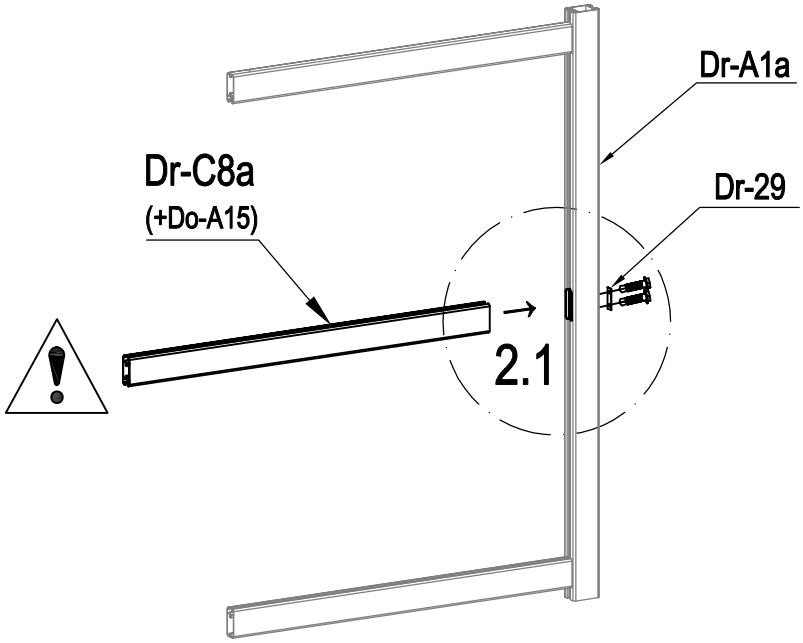

EN: reinforced slat for automation
FR: lame renforcée pour l'automatisation
DE: verstärkte Lamelle für die Automatisierung
ES: Lámina reforzada para la automatización
PT: ripa reforçada para automatização
IT: lamella rinforzata per l'automazione
NL: versterkte lat voor automatisering
PL: wzmocniona listwa do automatyzacji

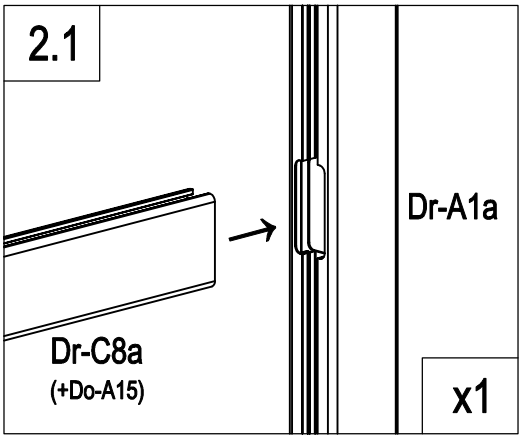

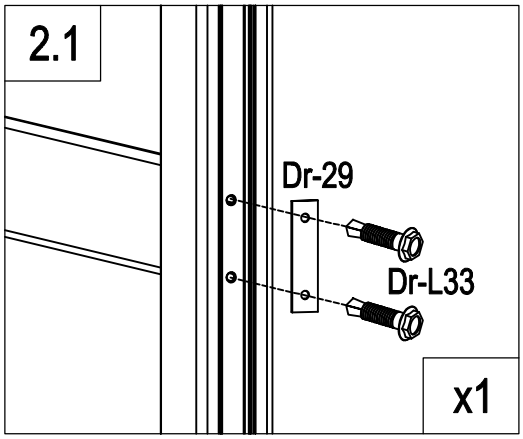

	Dr-C8a (+Do-A15)	1
	Dr-29	1
	Dr-L33	2

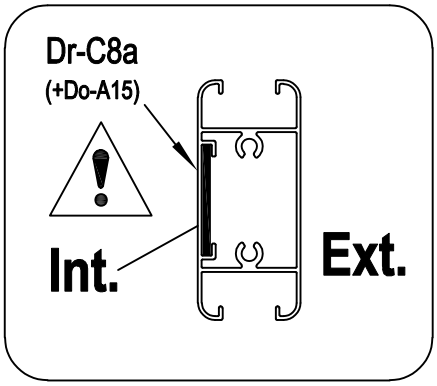

2025-2026

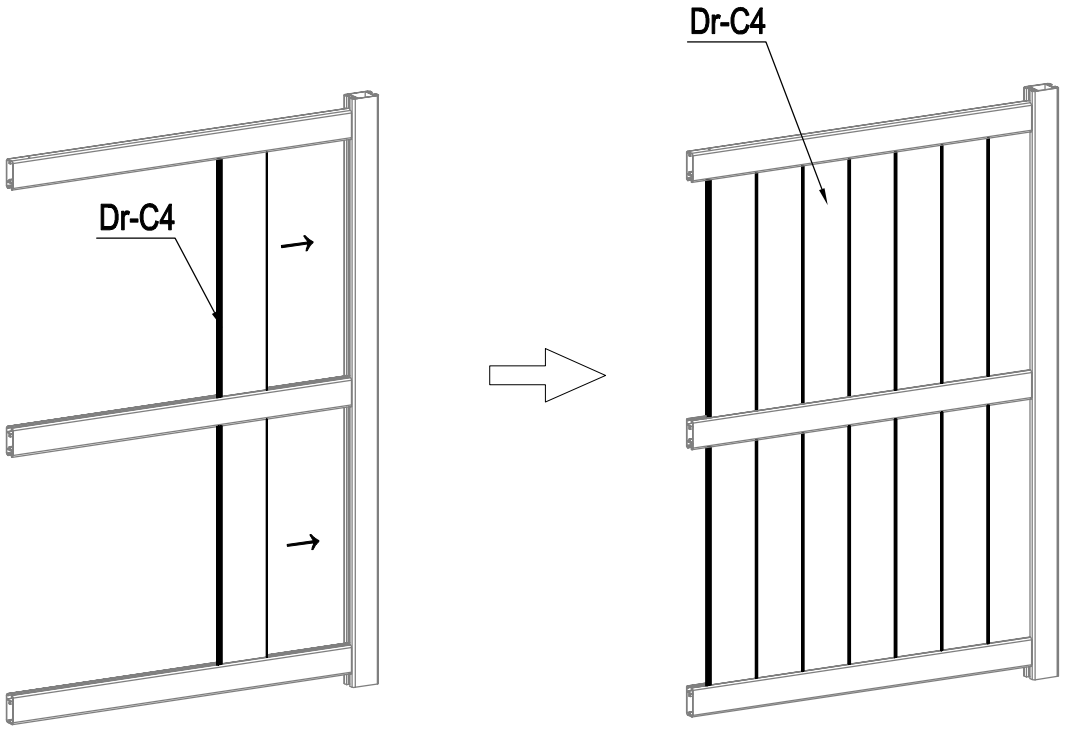

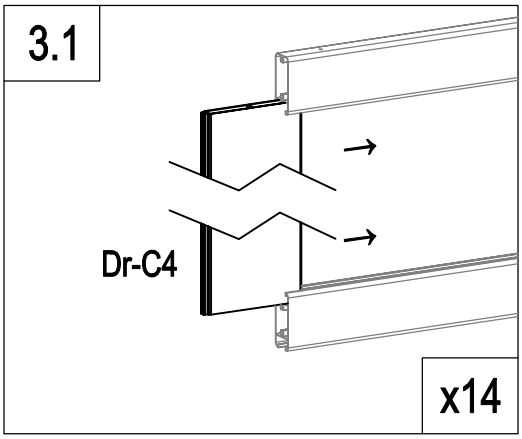

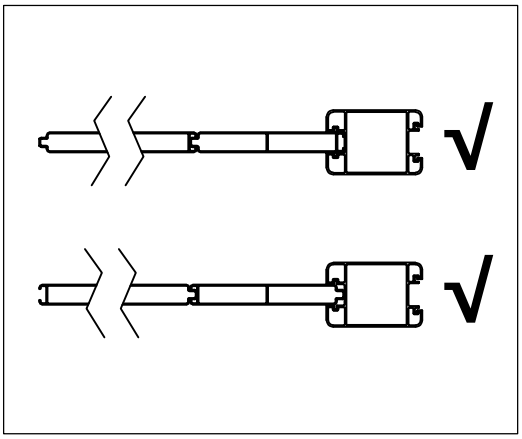

	Dr-C4	14

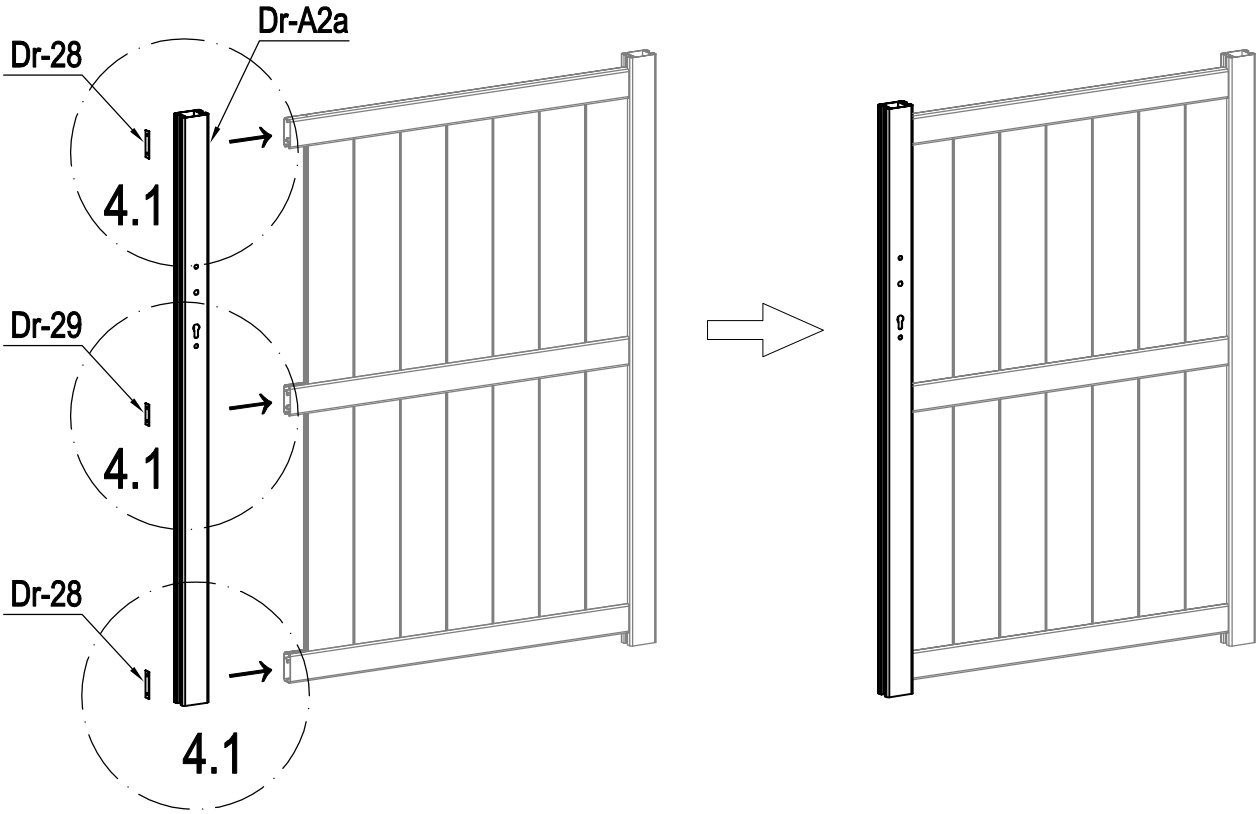

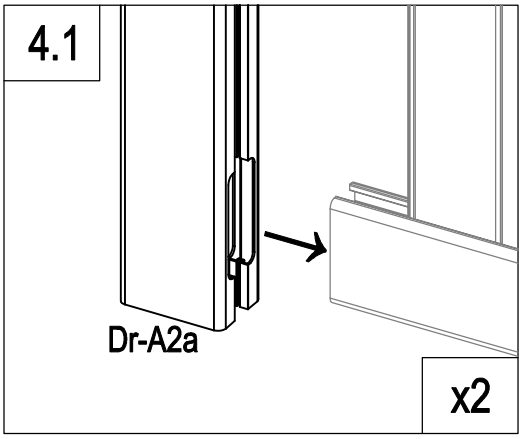

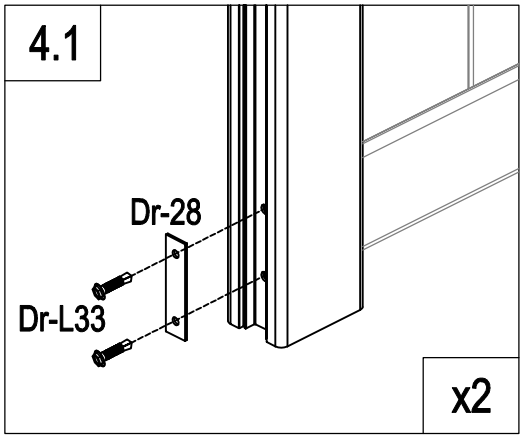

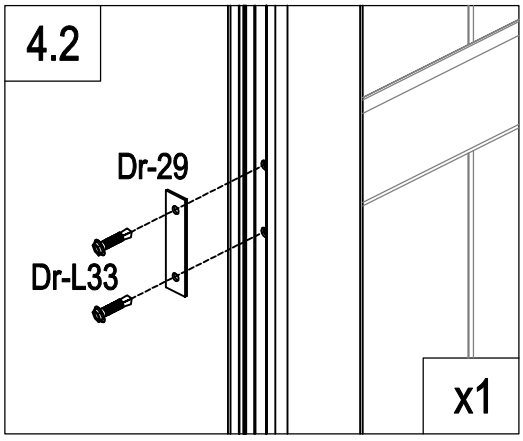

	Dr-A2a	1
	Dr-28	2
	Dr-29	1
	Dr-L33	6

2025-2026

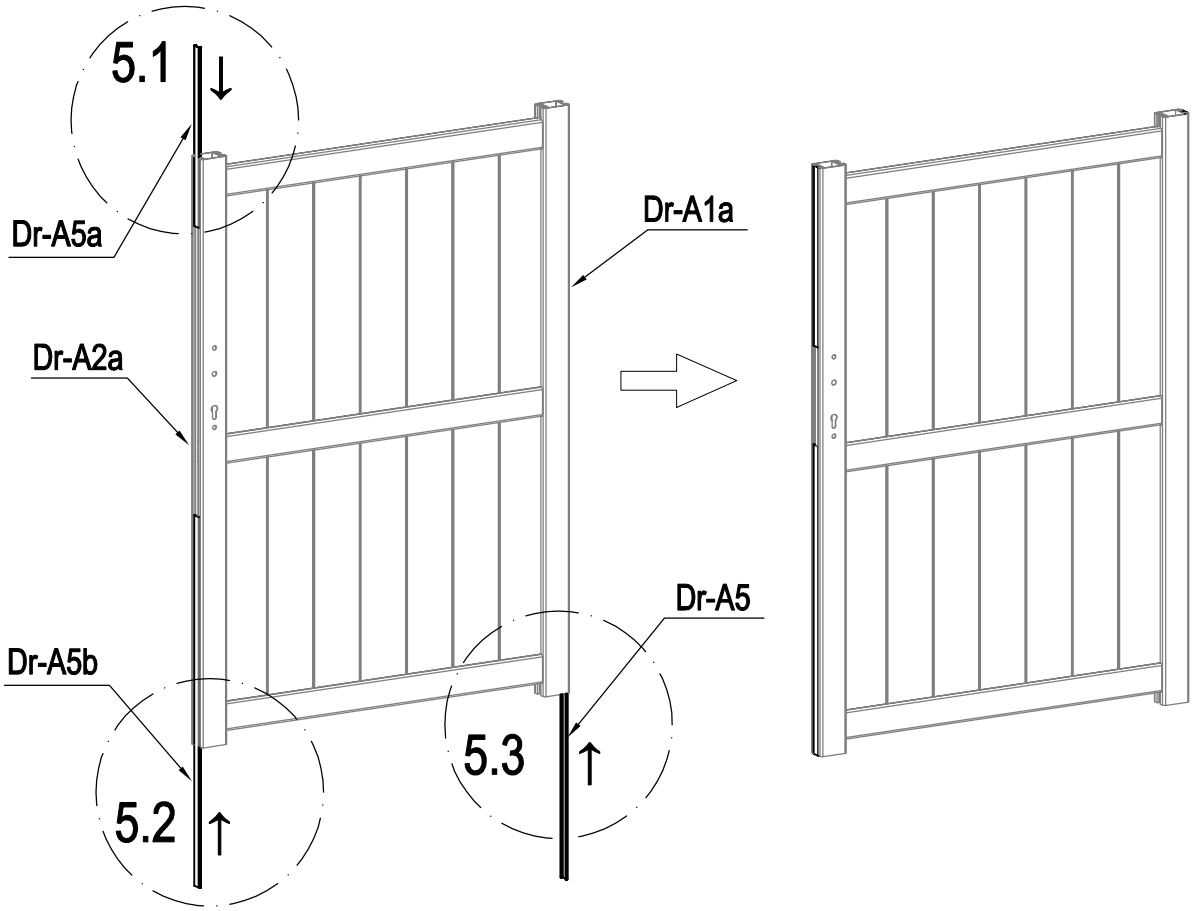

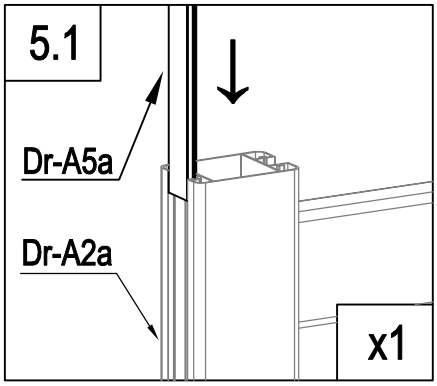

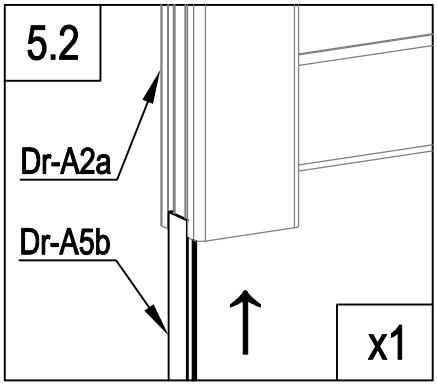

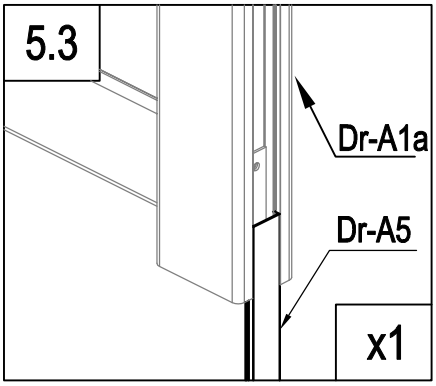

	Dr-A5	1
	Dr-A5a	1
	Dr-A5b	1

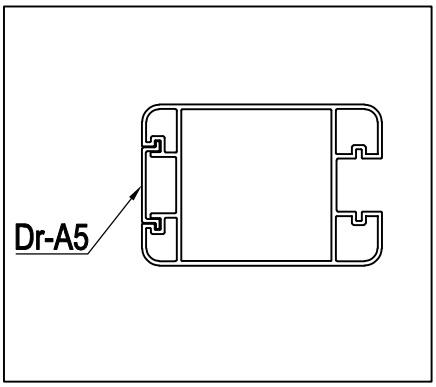

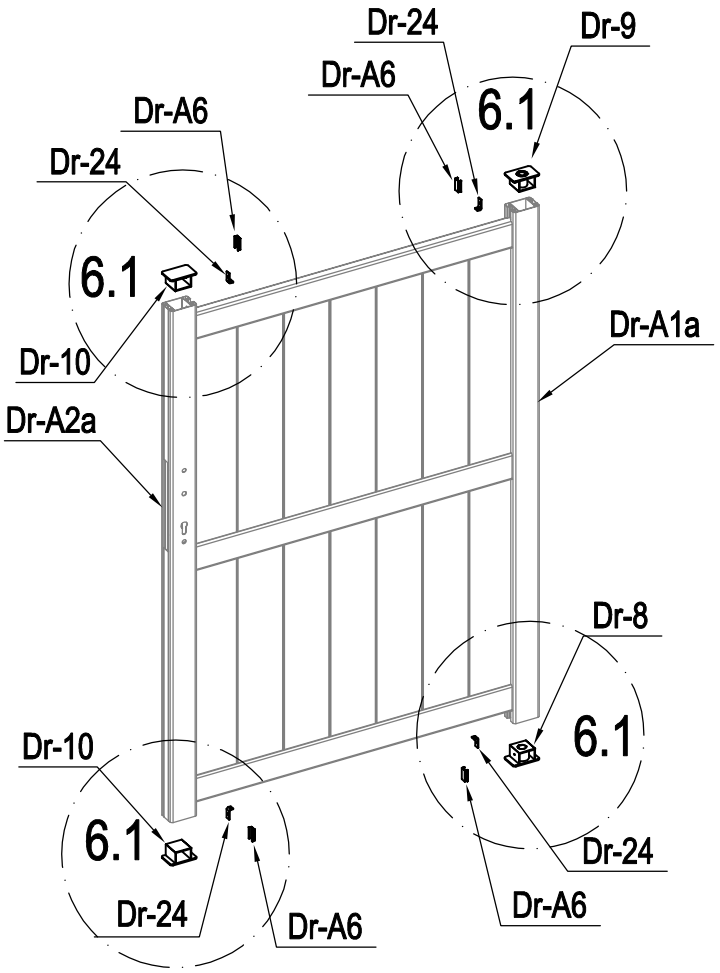

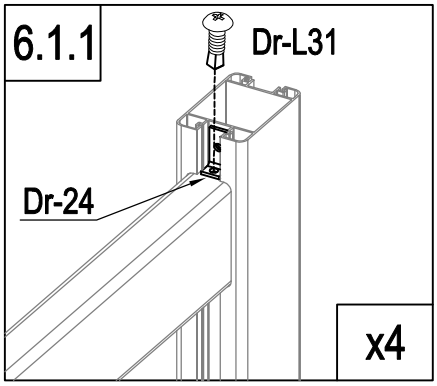

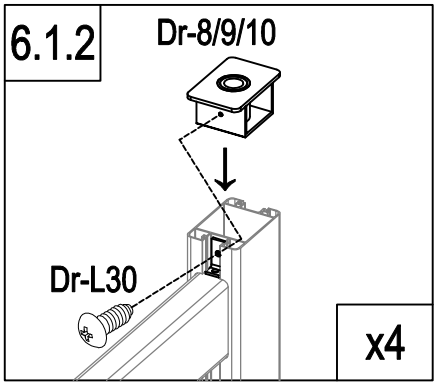

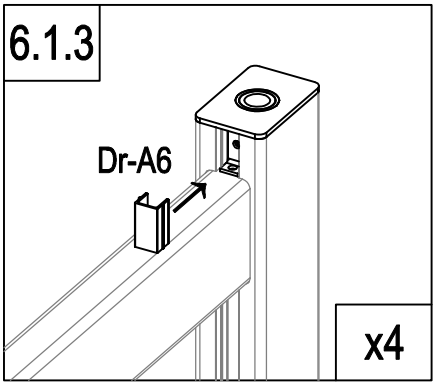

	Dr-8	1
	Dr-9	1
	Dr-10	2
	Dr-A6	4

	Dr-24	4
	Dr-L30	4
	Dr-L31	4

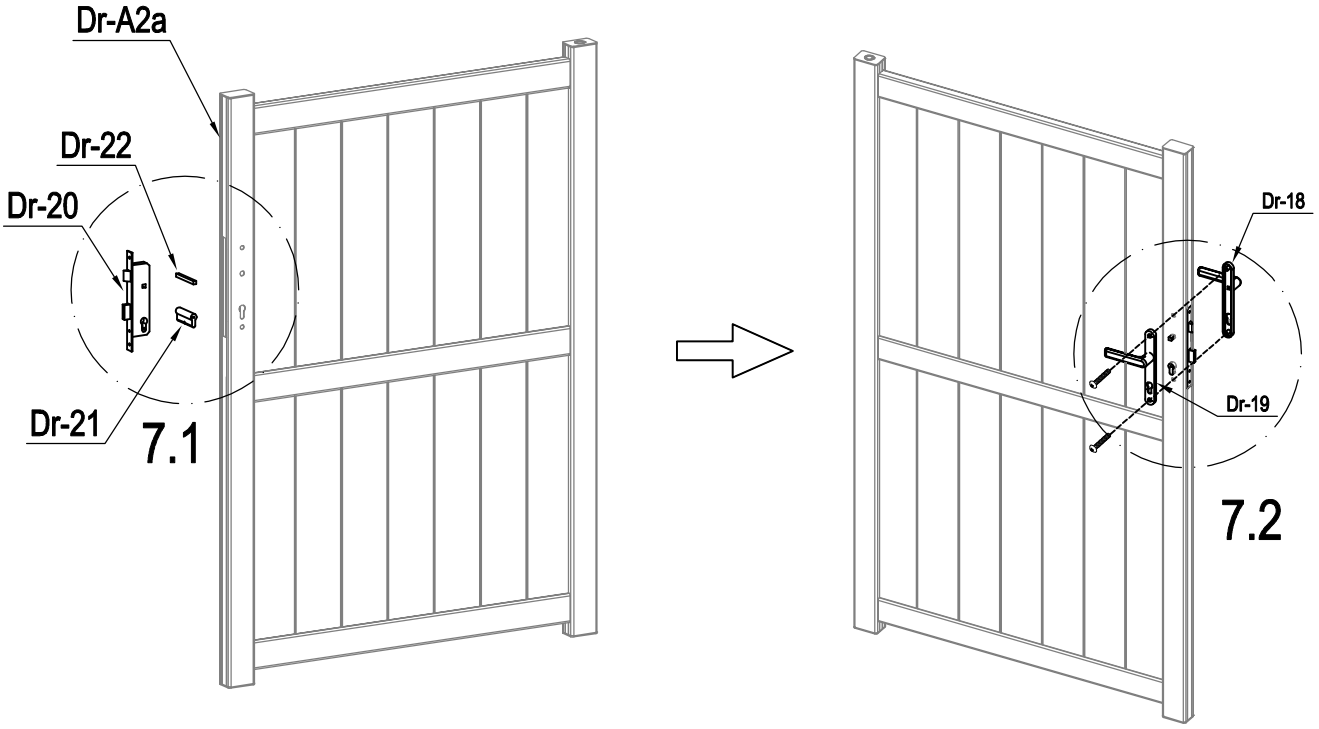

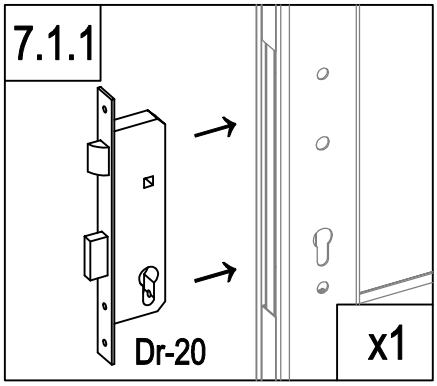

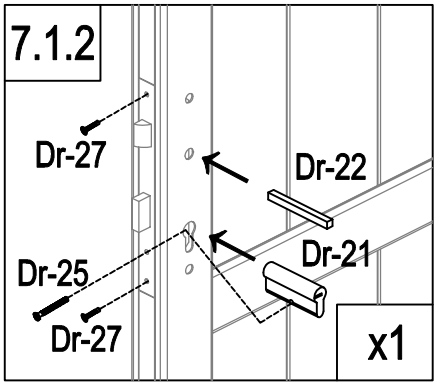

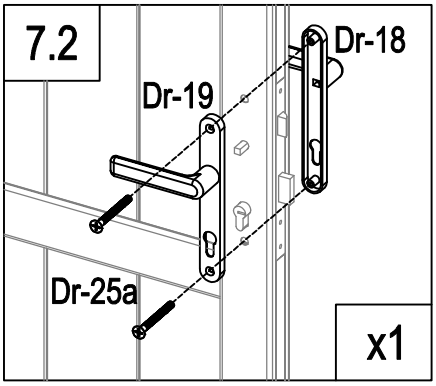

	Dr-20	1
	Dr-21	1
	Dr-22	1
	Dr-25	1

	Dr-18	1
	Dr-19	1
	Dr-25a	2
	Dr-27	2

2025-2026

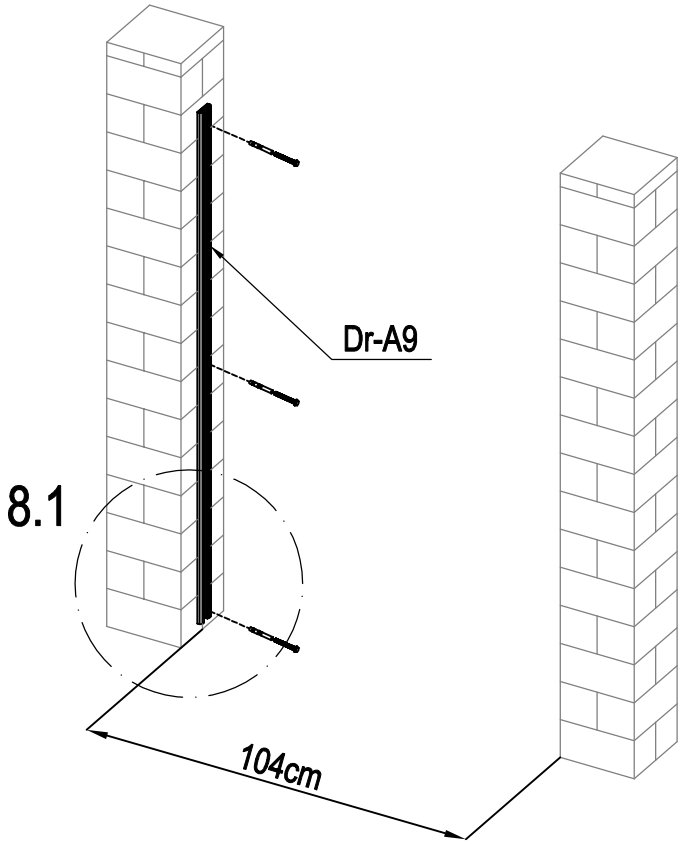

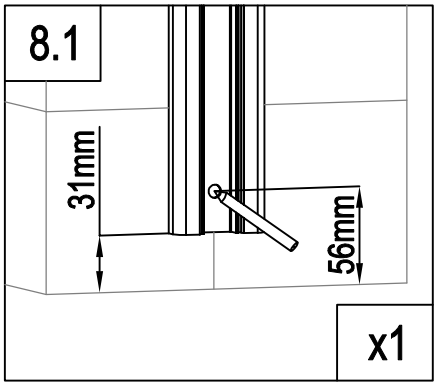

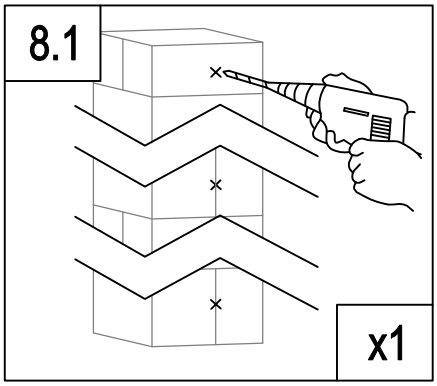

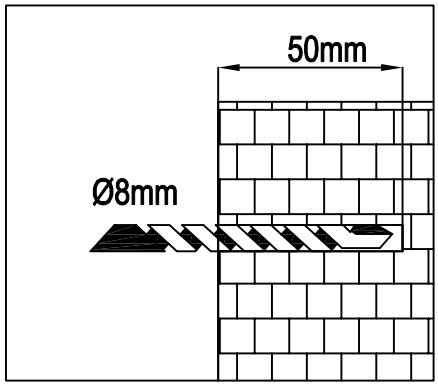

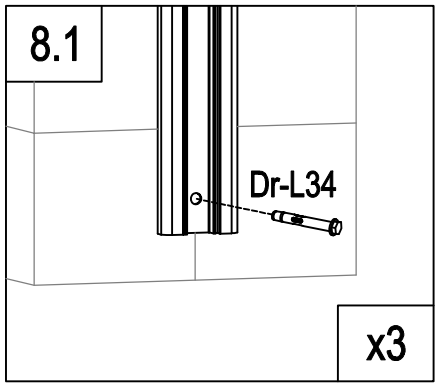

	Dr-A9	1
	Dr-L34	3

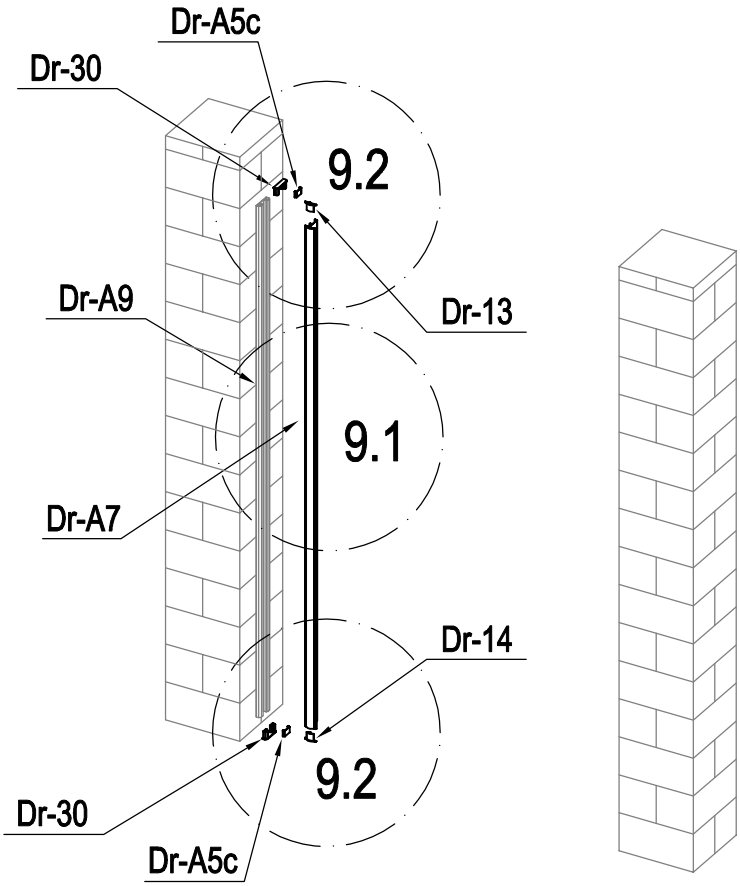

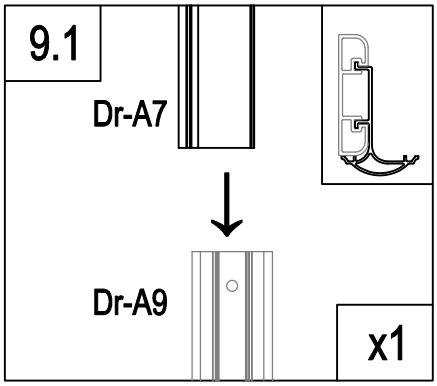

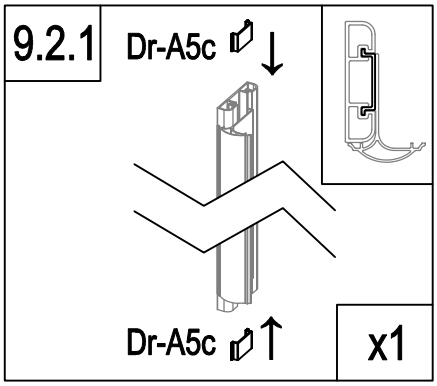

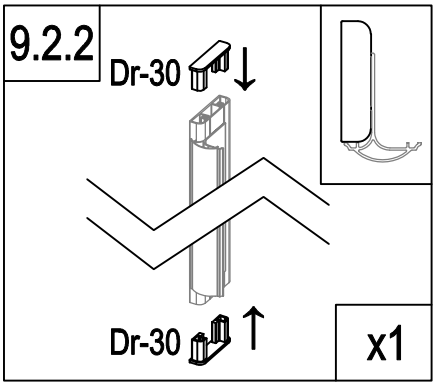

	Dr-A7	1
	Dr-13	1
	Dr-14	1
	Dr-30	2
	Dr-A5c	2

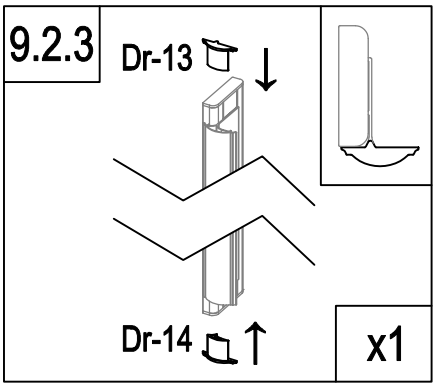

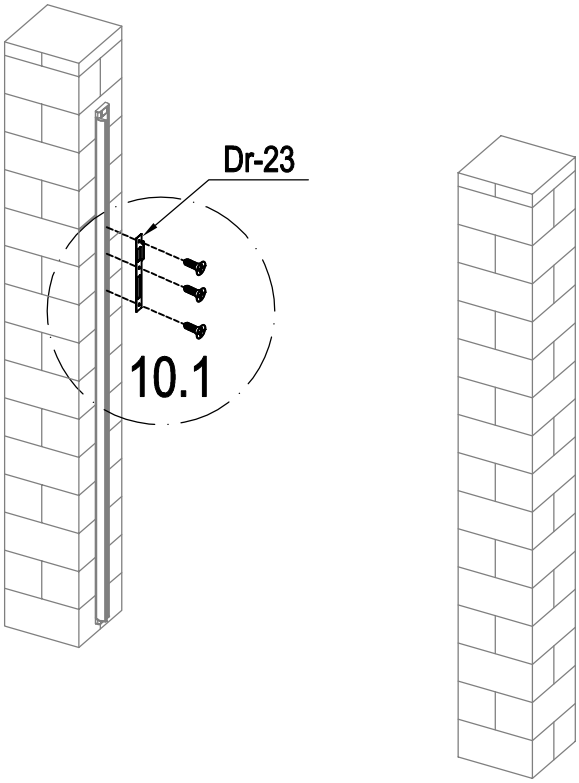

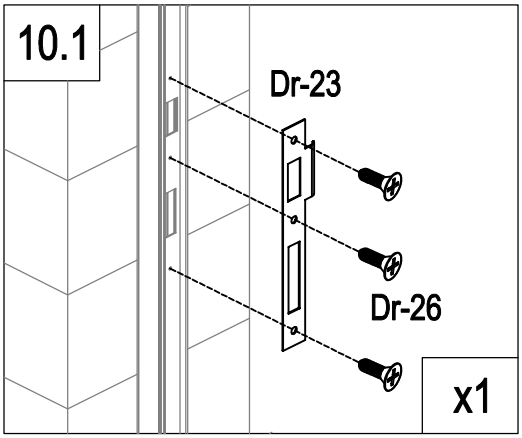

	Dr-23	1
	Dr-26	3

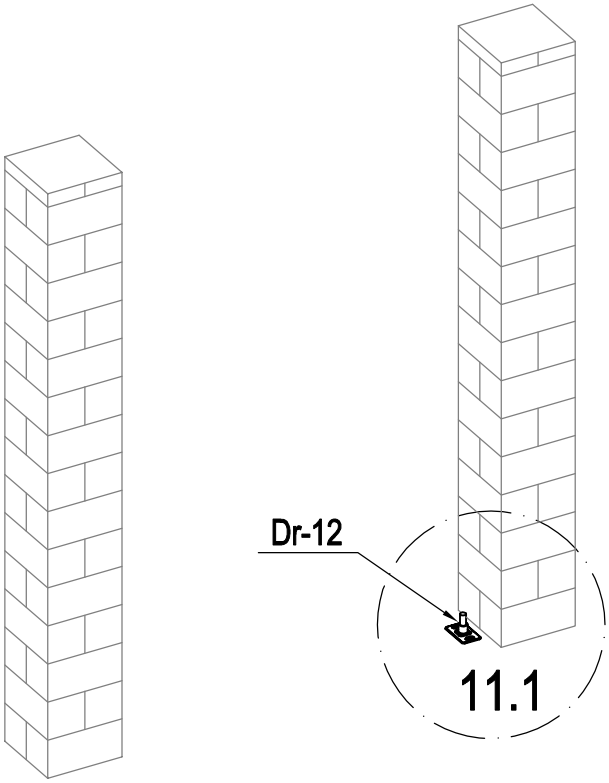

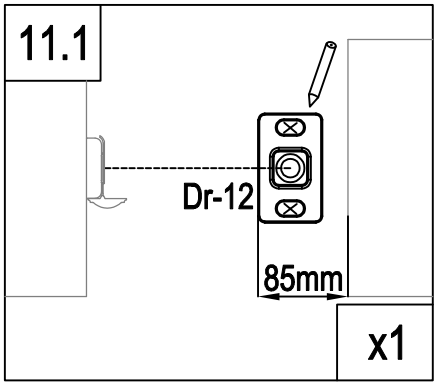

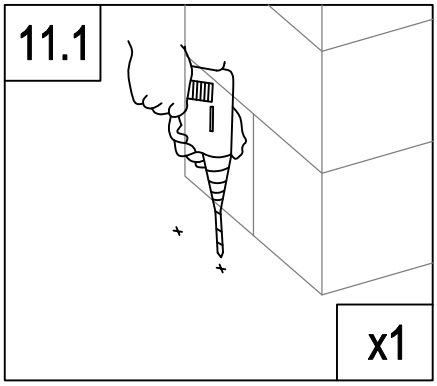

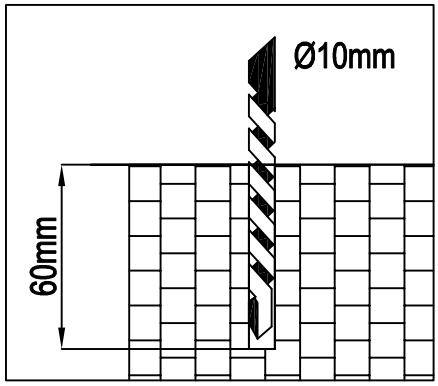

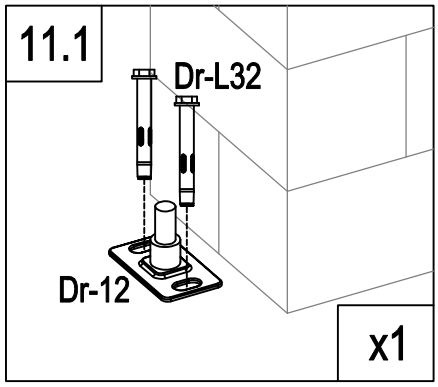

	Dr-12	1
	Dr-L32	2

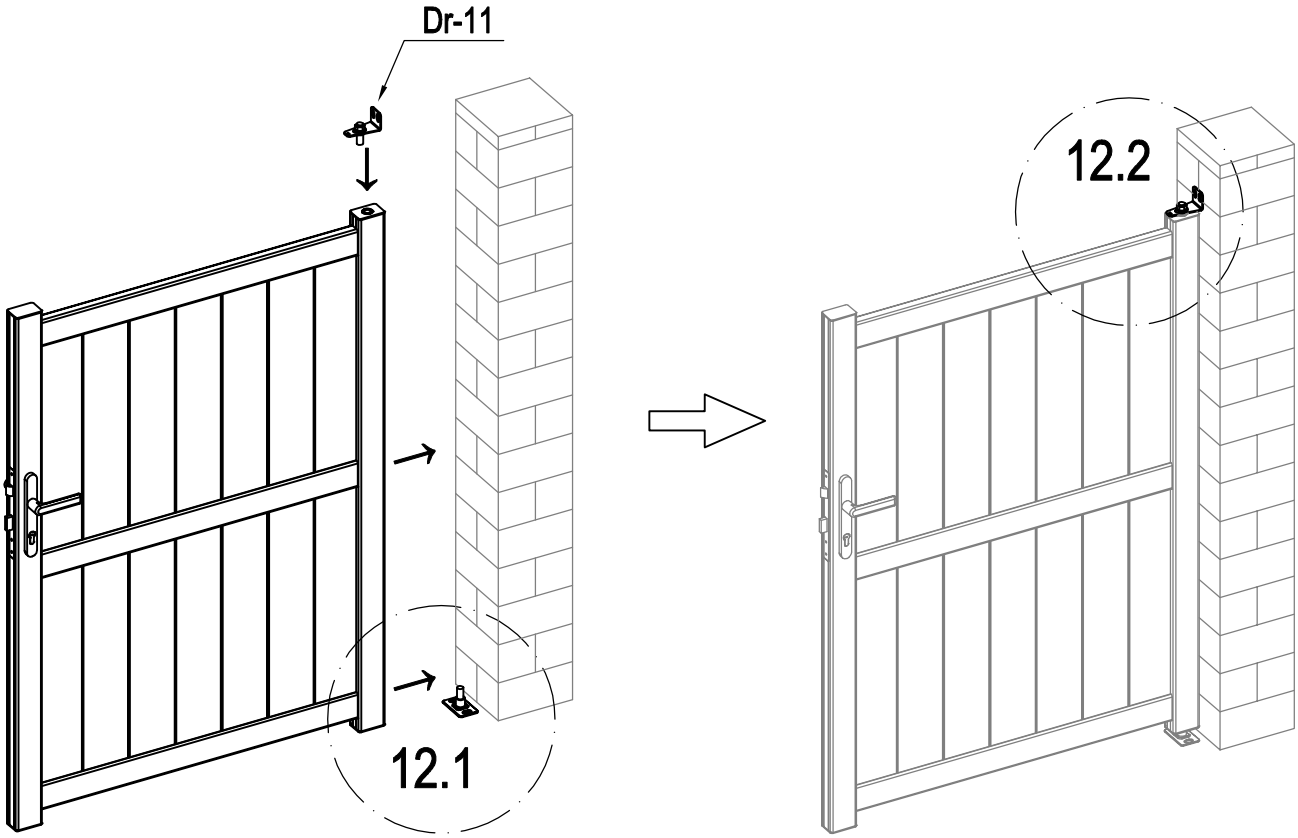

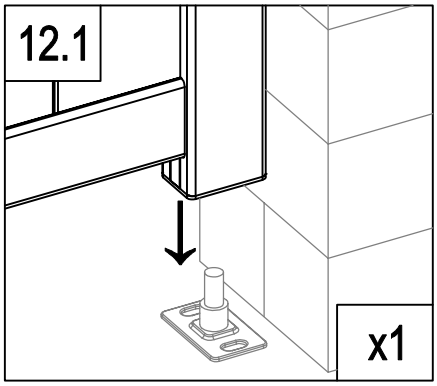

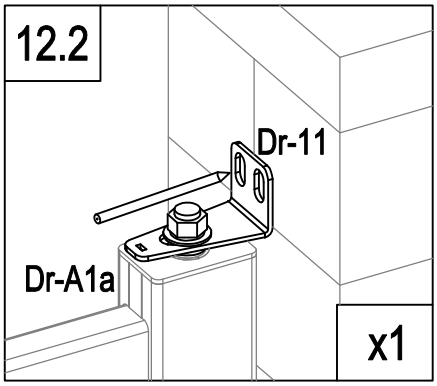

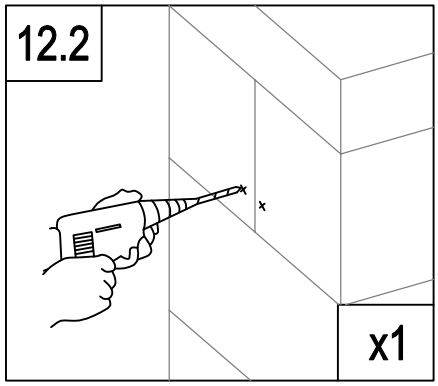

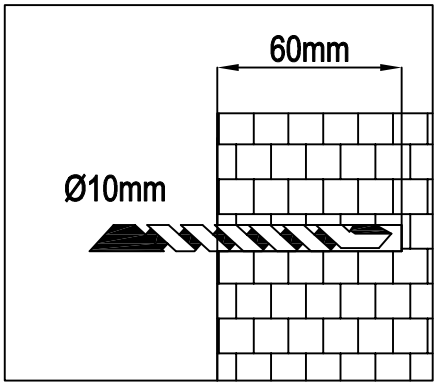

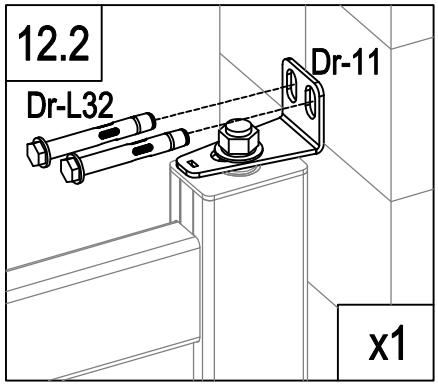

	Dr-11	1
	Dr-L32	2

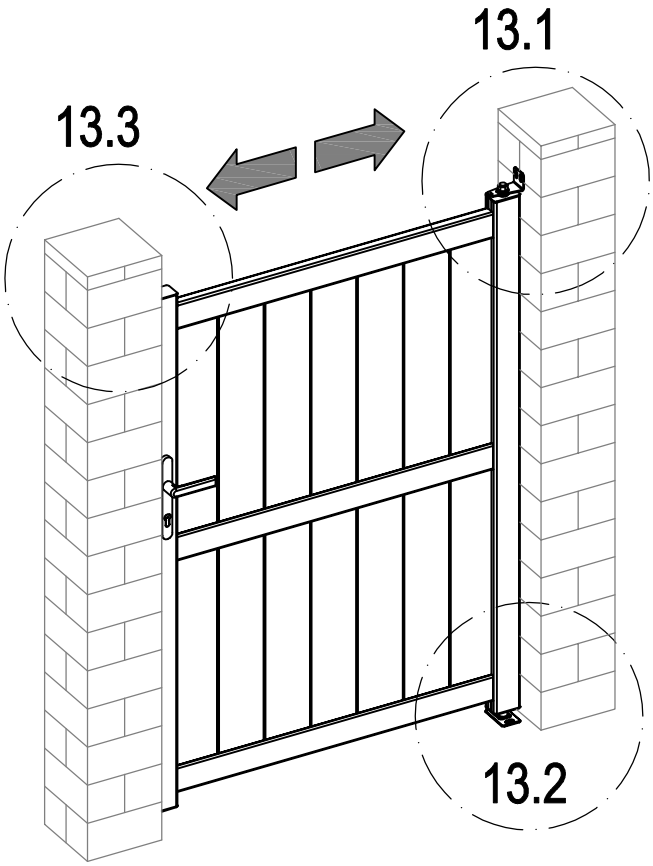
13.1
13.3
13.2

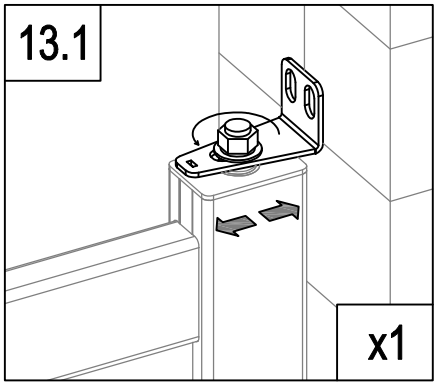
13.1
x1

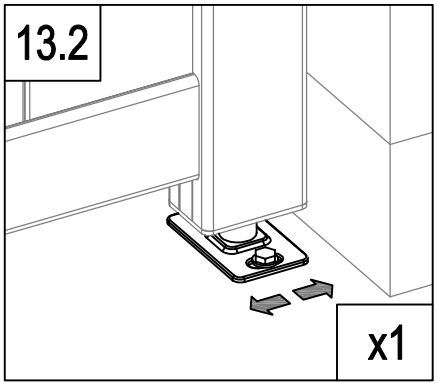
13.2
x1

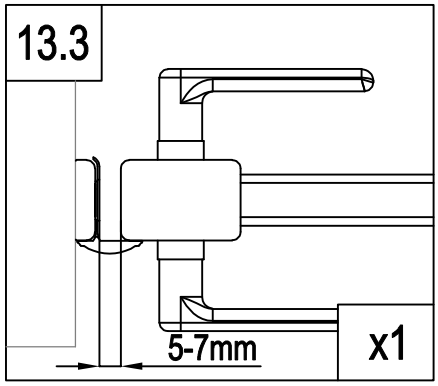
13.3
5-7mm
x1

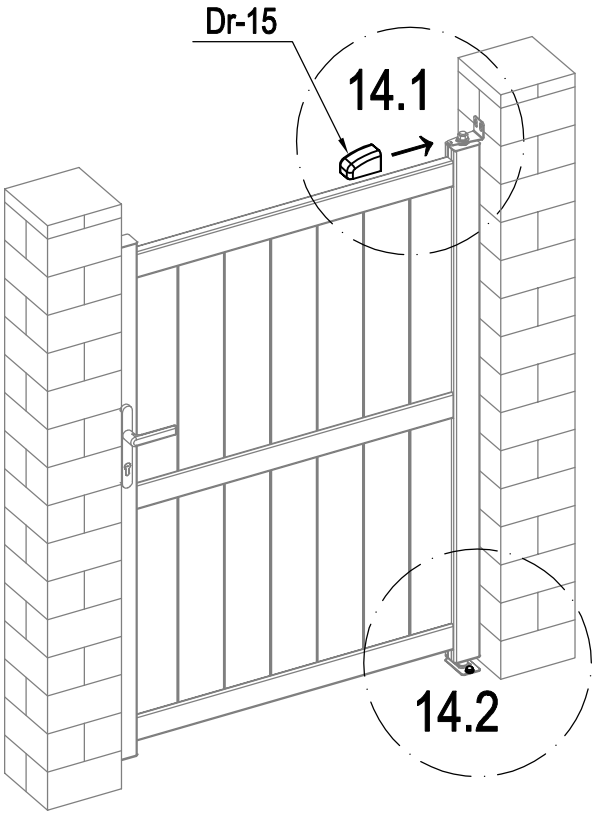

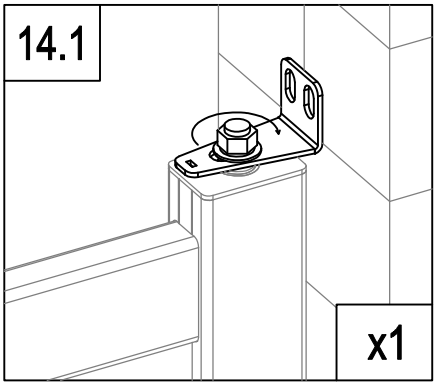

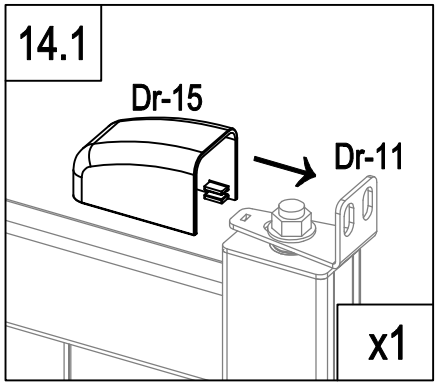

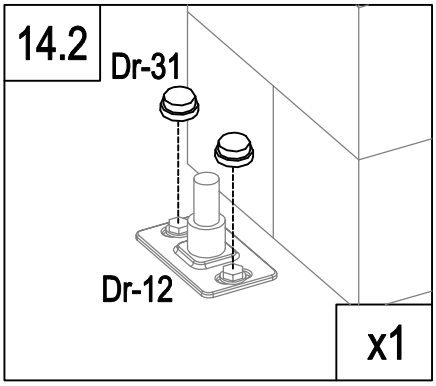

	Dr-15	1
	Dr-31	2

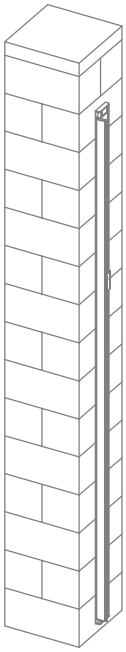

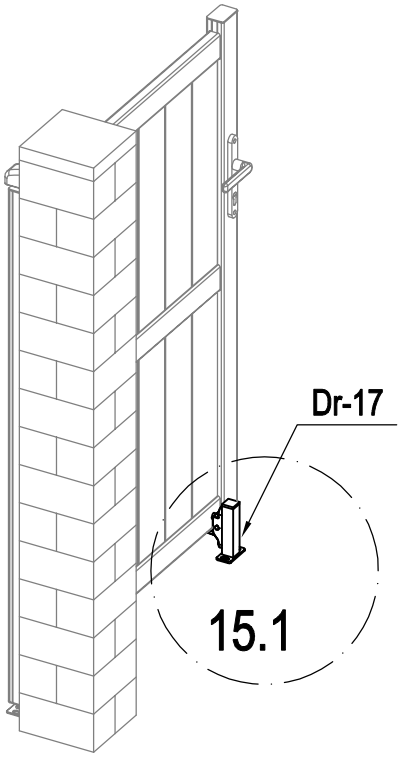

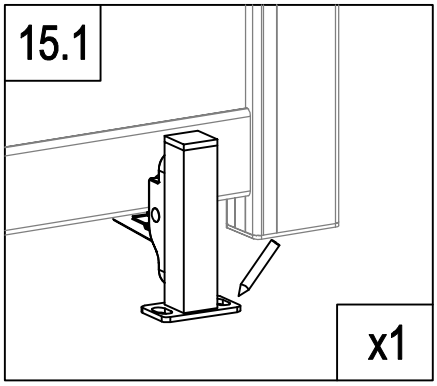

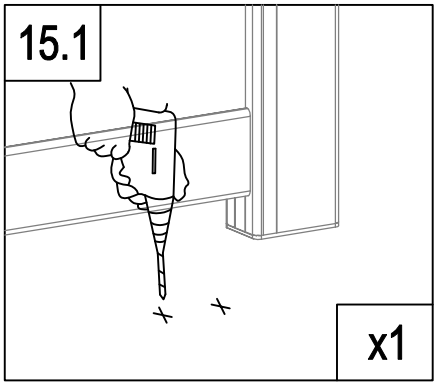

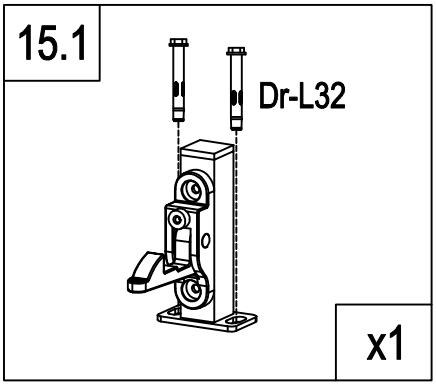

	Dr-L32	2
	Dr-17	1

Responsable de la commercialisation du produit / Company in charge of commercializing the product / Responsable de la comercialización del producto / Responsabile della commercializzazione del prodotto:
GECODIS SA
32, rue de paradis
75010, Paris, France

Service commercial/ Commercial service/ Servicio comercial / Servizio commerciale :
Habitatetjardin.com
32, rue de paradis
75010, Paris, France
Assistance : +33 (0) 1 47 70 33 64

Service après-vente/ After sale services/ Servicio post-venta / Servizio dopo vendità:
GECODIS SA
32, rue de paradis
75010, Paris, France
http://sav.habitatetjardin.com